The Nuts And Bolts Of Liquid Ring Pumps In Filtration

By Amy Harold, Gardner-Denver

What do chemical processing, mining, food production, water treatment and paper manufacturing have in common? They are all important in supplying necessary items for everyday living, and they all use vacuum filtration equipment. Just as importantly, they usually use liquid ring vacuum pumps as part of their filtration systems.

Operation Of A Liquid Ring Pump

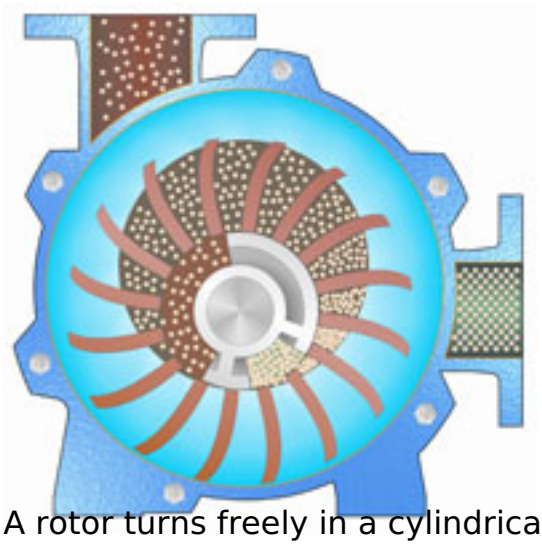

A rotor turns freely in a cylindrical casing. The blades of the rotor are enclosed, thus forming a series of buckets to capture compressed gas. The rotor rotates around a center that contains inlet and discharge ports, which allow the gas to enter and exit the pump.
A liquid ring pump uses water, or any other suitable liquid, in the casing&#151thus explaining the "liquid ring" name. The liquid rotates around the periphery of the casing, propelled by the rotor blades. Centrifugal force causes a solid ring of liquid inside the casing. The rotor is smaller in diameter than the casing, and the center line is offset from the center line of the casing. During part of the cycle of rotation, the rotor buckets are entirely filled with liquid. During other parts of the cycle, as the liquid recedes into the casing, the rotor buckets empty. The liquid, alternately entering and leaving the rotor buckets, creates a series of liquid pistons that move in and out of the rotor buckets.
Gas enters the pump through the inlet port, which is located at the point where the liquid moves away from the shaft and into the casing. The gas is drawn into the rotor chambers by the receding liquid ring, similar to the suction stroke of a piston in a cylinder. The gas is compressed as the liquid ring moves back toward the shaft. The discharge port is located at the point in the rotating cycle where the liquid

moves back into the rotor buckets. This permits the compression and discharge of gas. This effect, repeated many times per minute, produces an uninterrupted air flow without pulsation.

Types Of Filtration Pumps

Other types of high-quality pumps are used in vacuum filtration, but they often need to be replaced or rebuilt every 18 months or so. In identical applications, a liquid ring pump can operate continuously for five years or more. The reason is that a liquid ring pump can handle filtrate carryover. When filtrate carries over to a liquid ring pump, there is room for the additional liquid. The potentially damaging impacts of the liquid slugs are cushioned by the ring of liquid compressant.
Even with complete filtrate separation ahead of the vacuum system, solid material can be carried over into the pump by entrainment in the gas. In some cases in which filtrate liquid carries over, it brings solids with it, sometimes as masses of filter cake. The continuous washing action inside a Nash vacuum pump flushes out solids, so that they do not accumulate. There are no small passages to clog, no rubbing surfaces that require lubrication.
Most liquid-sealed lobe-type pumps can handle a small amount of liquid carryover. They can also handle some solid fines. Abrasive particles tend to cause wear in their close internal clearances. Massive slugs of liquid entering these pumps cause severe damage. Reciprocating piston pumps tolerate even less liquid and solids carryover. Liquid dilutes their lubricant. Any significant quantity of solid material causes wear and fouls their valves. A reciprocating pump can also suffer severe damage, if a slug of liquid enters its inlet. These are not areas of concern in a liquid ring pump.

A Filtration Overview

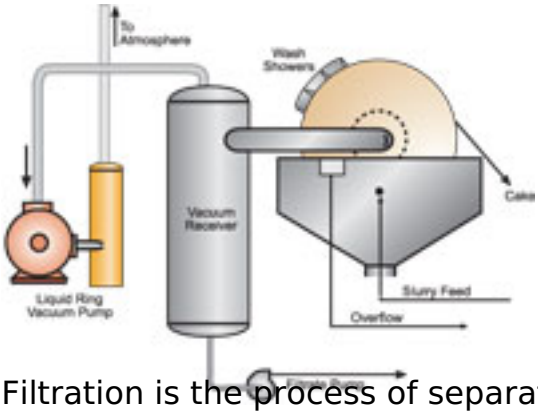

Filtration is the process of separating solid particles from a liquid slurry. All forms of filtration require a pressure differential to make the liquid pass through a porous filter medium/membrane. Some processes apply a vacuum to the underside of the filter medium in order to draw the liquid through. Other processes apply a compressed gas to the slurry side of the filter medium to force the liquid through. Below are two examples of how vacuum pumps are used in the filtration process, both of which are common in chemical processing.
Rotary drum filters go through a couple of processes to achieve desired filtration:

- Cake formation: An internal valve opens, which allows vacuum to be

applied to the underside of the filter screen. The cake starts to form on the part of the drum that is submerged.

- Cake washing and drying: As the drum rotates out of the slurry, the drying portion of the cycle begins. Vacuum continues to be applied in order to create the pressure differential necessary to remove the filtrate.
- Cake discharge: An internal valve is used to close off the vacuum at this point. The discharge mechanism can be a scraper, belt, roll or string. Compressed air can be used to help remove the cake from the filter screen.

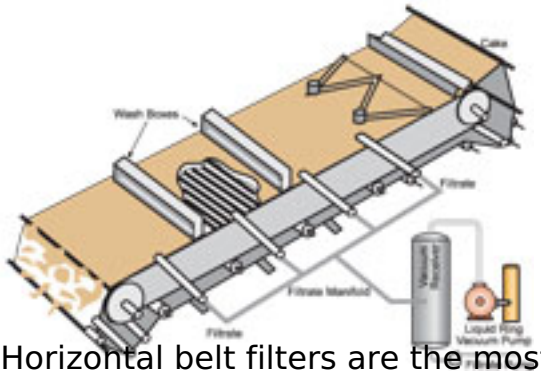

Horizontal belt filters are the most common vacuum filters in the industry, due to flexibility of operation, adaptation to corrosive slurries and the ability to handle large throughputs. The belt filter is comprised of:

- A belt&#151this endless rubber belt drains the filtrate toward holes positioned along the belt. The sides of the belt have shrouds to contain the slurry and cake.
- A filter cloth to retain the cake and move with the belt.
- Vacuum boxes, which are below the belt, intended to collect the filtrate through a manifold.
- Feed and wash boxes that are mounted over the filter, and designed to evenly distribute the slurry and wash water across the belt.
- A cake discharge end&#151at the end of the filter, the cycle terminates, and the cloth leaves the belt. Then the cloth continues moving over a discharge roll and discharges the cake through a chute.
- A belt-supporting deck, which is attached to the frame and mounted underneath the belt to support the heavy rubber belt and the cake load.
- A filtrate manifold that collects the liquids to one of the vacuum receivers.

Summary

If you are looking for an effective vacuum pump for your filtration process, a liquid ring pump is a viable product to examine. A liquid ring vacuum pump:

- Accepts carryover. Soft solids, moisture, slugs, chemicals, etc. will not harm the pump. These impurities simply wash out through the pump discharge.
- Grants cool and quiet operation. The pump runs cool owing to the circulation of the sealing water inside the pump. The operation is also relatively quiet&#151not exceeding 85 dBA.
- Offers constant operation for any vacuum level-from 29" HG vacuum to

atmospheric pressure. Provides easy maintenance. This pump has few parts and only one moving part. Therefore wear is less, and maintenance is simpler and cheaper.
- Has a longer pump life, mainly due to its robust construction and because the pump has only one moving part.
- Is environmentally friendly. The pump does not require any oil changes, filters, oil pans, condensers, etc. Plant rooms run clean, free of oil contamination and oil discharge to sewers.

Source URL (retrieved on *09/18/2014 - 3:49am*):
http://www.chem.info/product-releases/2008/05/nuts-and-bolts-liquid-ring-pumps-filtration