Controlling Motor Inefficiencies

By Christian Fritz, Product Marketing Manager, and Brian MacCleery, Senior Product Manager, National Instruments

In the face of economic uncertainties and increasing environmental concerns, many businesses today are evaluating ways to make their operations more lean, efficient, and environmentally friendly.

Examining the electricity bill is a good place to start. The top consumers of electricity are typically the HVAC system, water heating, lighting, office equipment, and machinery. Motor control is responsible for about two-thirds of the total electrical energy consumption in a typical industrial facility.

They are everywhere: blowers, pumps, compressors, conveyors, machine tools, mixers, shredders, and more. To improve the efficiency and lower the operating costs of the electric motors in your enterprise, consider the following factors.

High-Efficiency Motor Control The fundamental purpose of any electric motor is to convert electrical power into mechanical energy. A motor running at 50 percent efficiency is converting half of the electrical power into useful mechanical work at the motor shaft, while the rest is wasted. Electricity costs make up 96 percent of the total life-cycle cost of a motor, while the original purchase price and maintenance costs combined contribute only 4 percent.

When older motors need service, consider purchasing a new high-efficiency model rather than refurbishing the old motor. According to the U.S. Department of Energy (DOE), switching to a motor with a 4 to 6 percent higher efficiency rating can pay for itself in just two years if the motor is in operation for more than 4,000 hours a year.

Motor Sizing The DOE also estimates that 80 percent of all motors in the United States are oversized, causing businesses to pay a high price in wasted energy. As shown in the figure below, efficiency drops dramatically when the load is below about 40 percent of the full-rated load listed on the motor nameplate.

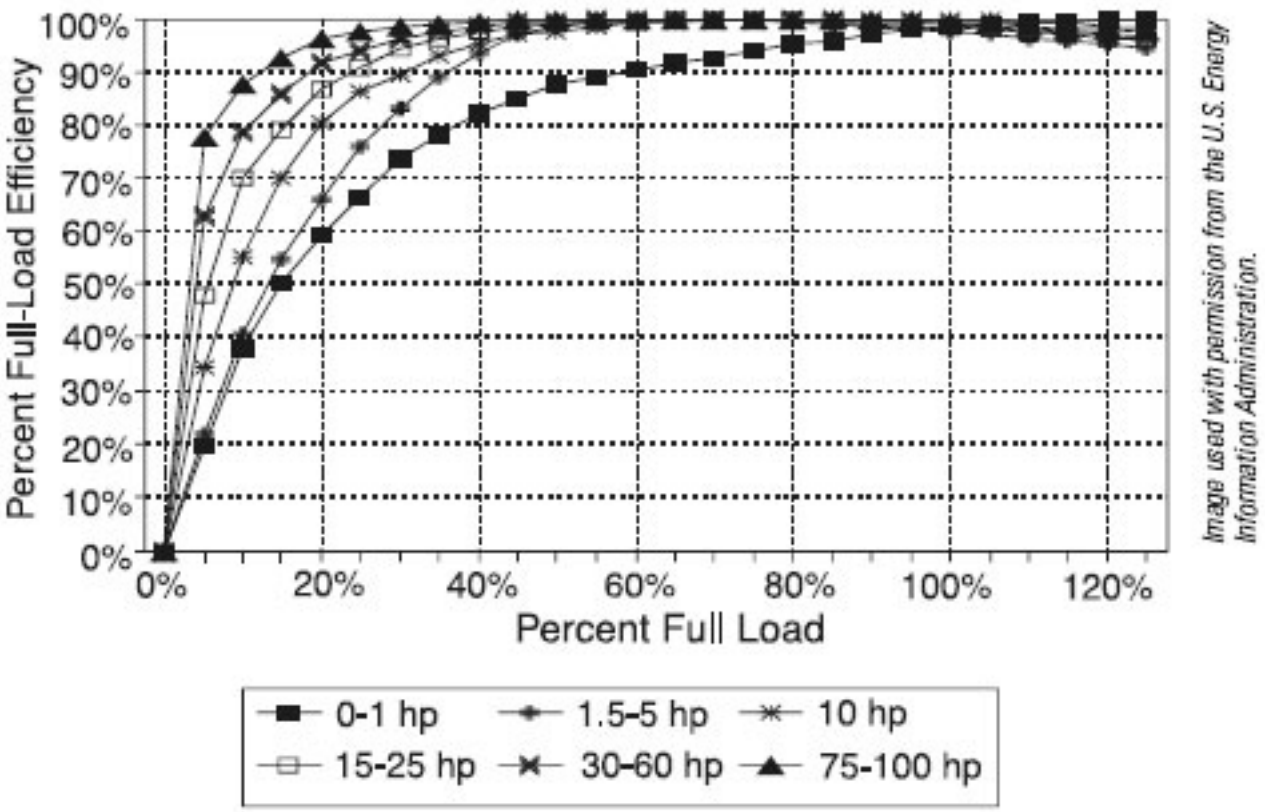

The key to proper motor sizing is to use accurate payload inertia, friction, and load torque information when selecting the motor. A number of sizing tools are available online to assist you in the process, such as MotorMaster+ [1] for AC induction motors and VisualSizer [2] for DC servo motors.

When sizing, a good rule of thumb is to choose a motor with a peak and RMS torque rating that is about 25 percent higher than the application requires. In the future, new virtual prototyping tools will help provide more accurate torque and velocity data by linking NI LabVIEW motion control programming software with the 3D mechanical CAD environment for simulation purposes.

Motor Control Technology The type of motor control you choose for the application has a big impact on energy efficiency. For low-power applications, stepper motors and brushed DC motors are popular due to their low purchase price and simple control circuitry, but they provide somewhat lower energy efficiency and, therefore, higher operating costs.

In terms of energy efficiency, stepper motors are particularly poor performers because they draw power even when stopped, and they must be significantly oversized due to their weak torque output at high speeds.

Brushless DC (BLDC) motors and permanent magnet synchronous AC motors (PMSM) are both commonly referred to as brushless DC motors, but they differ only in the way their stator is wound. When rotated, the stator of the BLDC is wound in such a way as to produce a trapezoidally shaped back emf voltage, while the PMSM produces a sinusoidally shaped voltage. The internal structure is like an induction motor containing permanent magnets on the rotor rather than windings.

BLDC motors have a higher sticker price but provide better energy efficiency and performance when controlled using advanced algorithms, compared to AC induction motors, as explained later. BLDC motors can scale up to serve high-power and high-speed applications. BLDC motor adoption has quadrupled over the last five years to more than $1.2 billion USD according to the ARC Advisory Group, although AC induction motors still dominate the market.

AC induction motors, also known as asynchronous AC motors, are one of the oldest and most well-established types of motor. Invented in the 1880s, they are most commonly used in applications that do not require position control and typically provide lower energy efficiency than electronically controlled brushless motors.

AC induction motors can be operated without sophisticated controls and are very low cost, making them the workhorse for most household goods. AC induction motors are usually operated in an open loop fashion for constant speed applications but can also be augmented with more sophisticated controls for use in applications requiring variable speed and torque.

Improving Efficiency Even if you are not upgrading or purchasing new motors, you can still significantly improve your motor control energy efficiency. The key to reaping these savings can be found in the drive control algorithms.

For AC induction motors applications, consider installing a variable frequency drive (VFD) unit that lets you to control the motor speed to better match your load requirements.

Because brushless motors use permanent magnets in their rotor rather than passive windings, they natively provide higher power for their size and weight compared to induction motors. The key to high-efficiency operation, however, lies in the control system.

Advanced Motor Control Algorithms For brushless motors, a wide range of motor control system algorithms — including trapezoidal, sinusoidal, and field-oriented control (FOC) — are available. The simplest but lowest-performance method is trapezoidal control, also known as six-step control. For each of the six commutation steps, the motor drive provides a current path between two windings while leaving the third motor phase disconnected.

This method has significant performance limitations in the form of torque ripple, which causes vibration, noise, mechanical wear, and greatly reduced servo performance. Sinusoidal control, also known as voltage-over-frequency commutation, addresses many of these issues. A sinusoidal controller drives the three motor windings with currents that vary smoothly.

This eliminates the torque ripple issues and offers smooth rotation. The fundamental weakness of sinusoidal commutation, however, is that it attempts to control time-varying motor currents using a basic proportional-integral (PI) control algorithm and does not account for interactions between the phases. As a result, performance suffers at high speeds. FOC, also known as vector control, improves

upon sinusoidal control by providing high efficiency at faster motor speeds. It delivers the highest torque per watt of power of all the control techniques.

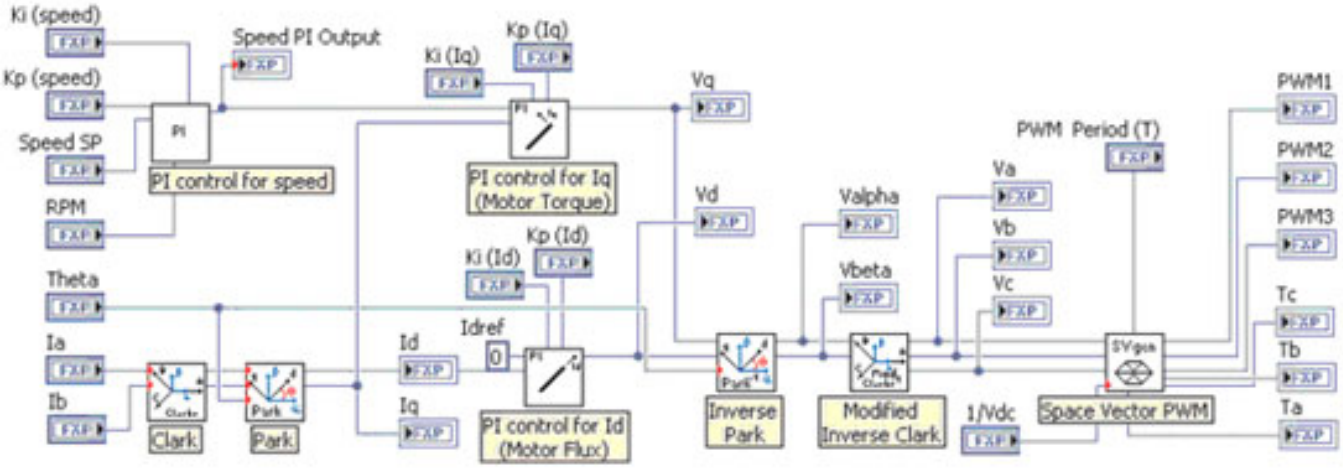

Under the hood, the FOC algorithm works by removing time and speed dependencies and allowing the direct and independent control of both magnetic flux and torque. This is done by mathematically transforming the electrical state of the motor into a two-coordinate time-invariant rotating frame using mathematical formulas known as the Clarke and Park transformations.

Space vector pulse-width modulation (PWM) is an efficient method to control the power electronics inverter; it both maximizes the usage of the motor supply voltage and minimizes harmonic losses. Harmonics can significantly reduce motor efficiency by inducing energy-sucking eddy currents in the iron core of the motor. Best of all, you can use FOC on both AC induction and brushless DC machines to improve their efficiency and performance, and you can apply FOC to existing motors by upgrading the control system.

Vector control techniques, such as FOC, can be employed with AC induction motors to enable servo motor-like performance. When evaluating motor control system upgrades, keep in mind that energy costs are typically orders of magnitude higher than hardware costs over the life cycle of the motor.

Improving motor control efficiency can produce significant energy and cash savings and provide a rapid return on investment. For example, a 5 percent efficiency increase on a 500 horsepower motor operated 8,000 hours per year could save more than $12,000 USD and 170 kwh of electricity each year for each motor.

Recently, systems engineering experts at National Instruments released FOC algorithms for the NI LabVIEW FPGA Module that you can download for free through the NI intellectual property network (IPNet). Visit ni.com/ipnet [3] to learn more about FOC, download the code, or share your own algorithms for high-efficiency motor control.

http://www.chem.info/news/2009/09/controlling-motor-inefficiencies?qt-most_popular=0

Links:
[1] http://www1.eere.energy.gov/industry/bestpractices/software_motormaster.html
[2] http://www.copperhillmedia.com/VisualSizer/index.html
[3] http://www.ni.com/ipnet