Next-Generation of Digital Display Benefits, Part 2

NICK TOLLEY, FUTEK Advanced Sensor Technology Inc.

This is part two of a two-part piece. Part one can be found here. *[1]*
[1]

Torque Certainty on Demand

A common asset among production floors is the slip-type torque driver or wrench. Whether the product is a medical device or automobile, seating various components or fasteners with a specific amount of torque can be crucial to the performance of an assembly when it is put into service. Unfortunately, due to the rough nature of torque application, these tools are particularly prone to drift and require more frequent verification than most other calibrated assets.

To eliminate reasonable doubt from the daily performance of these tools, a convenient in-house calibration system can be created by pairing the IHH500 Pro with the FUTEK TDF Series precision torque transducers. With TEDS (transducer electronic data sheet) Plug-n-Play technology, the IHH500 instantly auto-scales and parameterizes itself according to which transducer is connected, allowing an operator to literally go from checking fractions of an inch-ounce to thousands of foot-pounds in seconds.

The FUTEK TDF transducers are designed with a special flange baseplate so they can be easily mounted to a work bench or calibration cart in either a vertical or horizontal orientations, depending on what is most ergonomic for the technician over the capacity range the transducer. To complete the system, the IHH500 indicator has a somewhat rare but critical 1st Peak Mode that insures the peak torque is captured the moment the tool slips and is not confused with subsequent tool reaction.

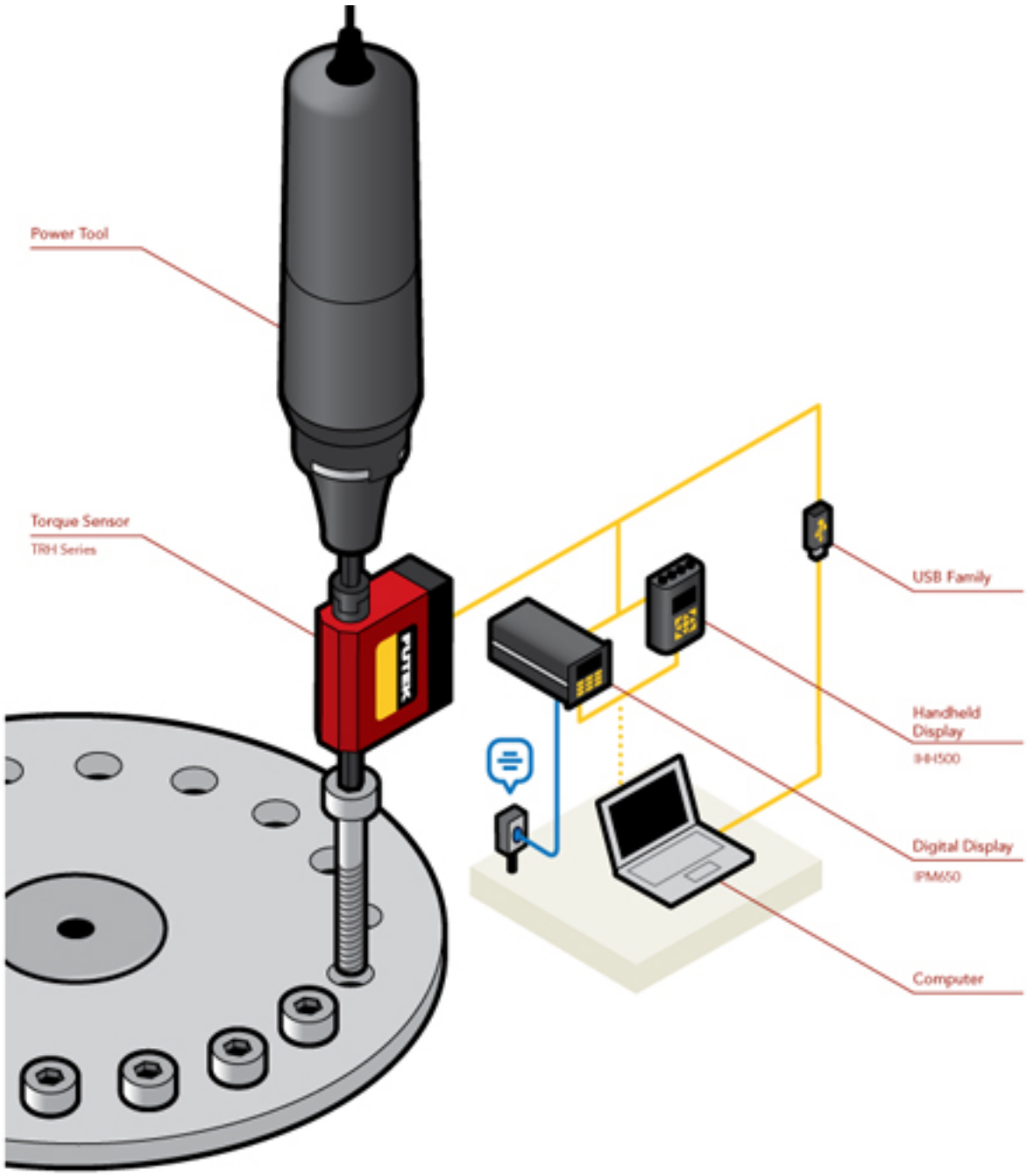

Complex Analysis, Simplified Method

Because of the increased degrees of freedom, analysis of phenomena involving torque and rotation are significantly more complex than events confined to force and linear motion. A seemingly natural consequence is that this increased complexity is inherited by the measurement instrumentation used for such analysis.

To characterize the performance of even a simple electric motor requires both its output torque and angular displacement to be related in time, allowing the derivation of meaningful results such as power and angular velocity. Such a measurement can be done by inputting torque transducer channels and rotary encoder channels into a data acquisition system and then reconciling the data streams with some sort of universal clock. As it sounds, the instrumentation for such systems is expensive and the setup of the system is quite involved.

Pairing the IHH500 Elite with a FUTEK TDR module creates a sort of metrological silver bullet for this application. The TDR module is a highly advanced sensor that combines a precision rotary torque transducer with an angular displacement encoder and outputs both signals through a specialized cable and terminal plug. Through a single input in the IHH500, both channels are simultaneously captured and results such as torque, angle, angular velocity (RPM), and power can be displayed in real time.

To take this analysis to greater depth, the included FUTEK SENSIT software can be used to graph and manipulate measurement data. SENSIT easily dimensions graphical data in terms of: measured parameters like load, displacement, and time; derived parameters like velocity and power; and even user-defined units of measure through its powerful Math Channel feature. By applying a simple scalar or formula to a given input channel, the Math Channel feature can transform torques into torsions, forces into stresses, and displacements into strains. It even has the ability to formulaically relate various input channels to generate differential and ratiometric measurements.

These applications are just a glimpse of what IHH500 displays in service all over the world encounter every day. The initial goal of the IHH project was to create a single display that could satisfy any measurement application with ease. The FUTEK engineering team quickly realized that only by combining powerful hardware with equally powerful software could such versatility be realized while maintaining our standards of design elegance and customer value. We feel confident that the IHH500 platform is fully prepared to meet measurement challenges across all industries and continents, but only through the continued feedback from our customers will we learn if our mission was accomplished.

This is part two of a two-part piece. Part one can be found here. *[1] For more information, please visit* www.futek.com *[2].*

Source URL (retrieved on *12/18/2013 - 4:02pm*):
http://www.chem.info/articles/2013/02/next-generation-digital-display-benefits-part-2

Links:
[1] http://www.chem.info/Articles/2013/02/Instrumentation-Next-Generation-of-Digital-Display-Benefits-Part-1/
[2] http://www.futek.com/