New PTFE Gasket for Butterfly Valve Enhances Process Reliability

TIMO JÄCKLE, KARL-HEINZ MAYER, WOLFGANG PAUL and BRIAN GORDON, GF Piping Systems

In the chemical processing industry and in many applications in other industries, valves frequently come into contact with highly corrosive fluids. The advantages and disadvantages of the wetted materials of the valve become apparent very quickly. The safety, reliability and cost-efficiency of the valves used is decided, in particular, in the field of seals and gaskets. Fundamental properties, such as resistance to chemical attack, corrosion and temperature, and also permeation rates, must be taken into account for all the materials used. These influencing factors become even more vital as temperatures and/or fluid concentrations increase. Acid mixtures, and also cleaning processes, have proven over and over to be extremely aggressive.

Butterfly Valves & Corrosive Media

Today, PTFE-lined metal butterfly valves are still predominantly used in the chemical processing industry. Plastic butterfly valves have been unable to reveal their full potential as yet, because there have been no thermoplastic butterfly valves with PTFE gaskets available on the market. For precisely this reason, GF Piping Systems has developed the plastic butterfly valves Types 567/568 with PTFE gaskets. The result is a homogeneous plastic piping system in which the valves fulfill all the requirements for aggressive media.

Which Materials Are Used for Butterfly Valves?

Fundamentally, metals such as spheroidal cast iron, stainless steel, hastelloy or titanium (housings, disks and stems), thermosetting plastics (housings), thermoplastics (housings and disk coatings), PTFE (gaskets) and elastomers (gaskets and collars) are used for butterfly valves.

The metallic materials do not as a rule come into direct contact with the medium, as metal parts such as housings or valve disks are coated with PTFE, PFA or elastomers, or the stems are appropriately sealed. Nevertheless, the poor corrosion resistance of metals comes fully to bear in applications with aggressive media, as the coating and sealing materials are permeable.

Thermoplastics, in contrast, are corrosion resistant and, depending on the material used, may have excellent resistance to chemicals. With regard to chemical resistance and anti-friction properties, PTFE has proven to be an almost unbeatable material. Its good temperature resistance is a further advantage. However, its lack of elasticity and its well-known cold flow properties make it less suitable as a gasket material. It should in any event be used in combination with an elastomer material.

Elastomer materials, with their outstanding elastic properties, are classically used in seals. Those predominantly used for chemically aggressive applications are fluorocarbon elastomers (FPM) and perfluorate elastomers (FFPM).

Even Thermal Expansion

Plastics expand more than metals in response to temperature changes, and this has to be taken into account in the planning of piping systems and in the design of the components. As temperatures of up to 248°F (120°C) are possible with PVDF in industrial plastic piping systems, special account has to be taken of thermal expansion.

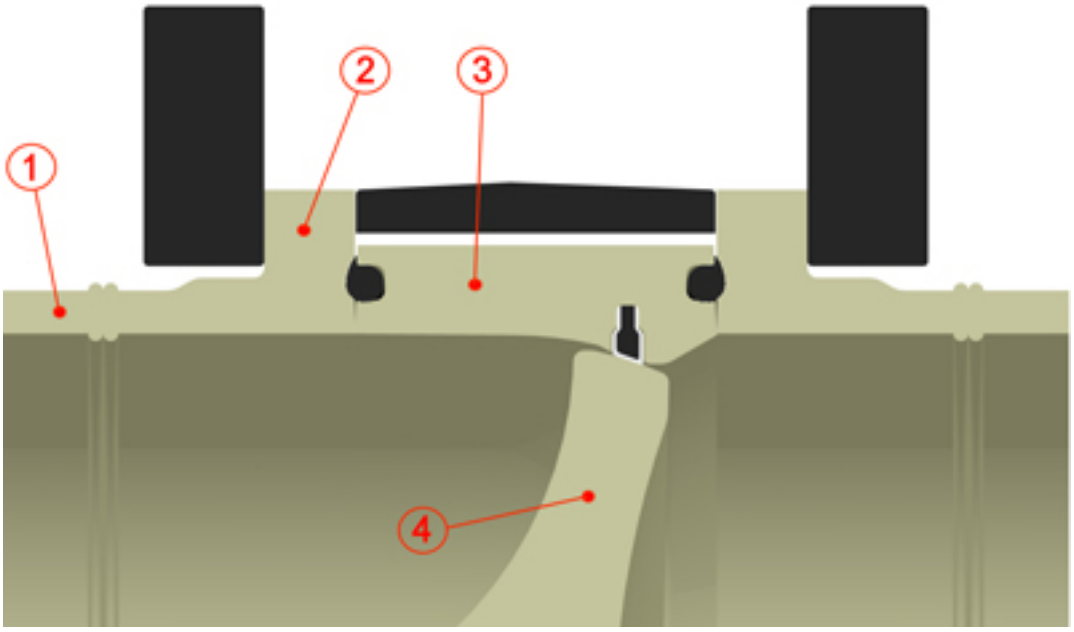

Fig. 1: Homogenous material selection in the valve's correcting environment assures uniform expansion and contraction, and therefore tightness, in case of temperature fluctuations. Photo Ids: 1=Pipe, 2=Flange Adapter, 3=Valve Body, 4=Disc

Butterfly valves Type 567/568 are designed in such a way that all plastic components in contact with the medium are of the same material as the corresponding piping system. In response to temperature changes, therefore, they expand at the same rate (Figure 1). Unimpeded expansion is ensured by a gap between the inner body and the outer body. The sealing components, specially designed for individual functions, compensate for minor relative motions.

Chemical Resistance & Permeation as Decisive Factors

In the case of butterfly shut-off valves, the materials used differ above all in their chemical resistance and permeation rate, which, in the final analysis combine to have a decisive influence on inward and outward tightness and on environmental impact. The design principle of the Type 567/568 Butterfly Shut-off Valves and the materials of construction have significant advantages with regard to chemical resistance and permeation.

The most important variable in consideration of permeation is the permeation rate, which indicates the permeability to gas per unit thickness. It is determined and influenced by temperature, the concentration of the medium and the wall thickness. The Type 567/568 Butterfly Valves have a thick-walled single piece inner body of PVDF with integrated FPM flange gasket, providing excellent chemical resistance. In comparison with the PTFE collars of butterfly valves in metal or thermosetting plastic, both materials have better permeation rates. The Type 567/568 Butterfly Valve shaft seal has more sealing elements than metal and thermosetting plastic shut-off valves and is completely sealed off from the medium, which prevents corrosion at the shaft and therefore increases process reliability. All in all, the Type 567/568 Butterfly Valves thus exhibit a better permeation rate and better resistance to chemicals.

Double Eccentric Functional Principle & Special Sealing System

Certain chemicals cause elastomers (EPDM/FPM) to swell. In addition, the lubrication applied at the works, which is necessary for optimum function, is removed from the sealing surfaces. Both these effects are responsible for the disk failing in extreme cases to slide over the conduit gasket, making tight closing with normal torque at least more difficult or no longer possible. If the disk is already in the closed position when this happens, the torque required to break it free can be many times that normally applied.

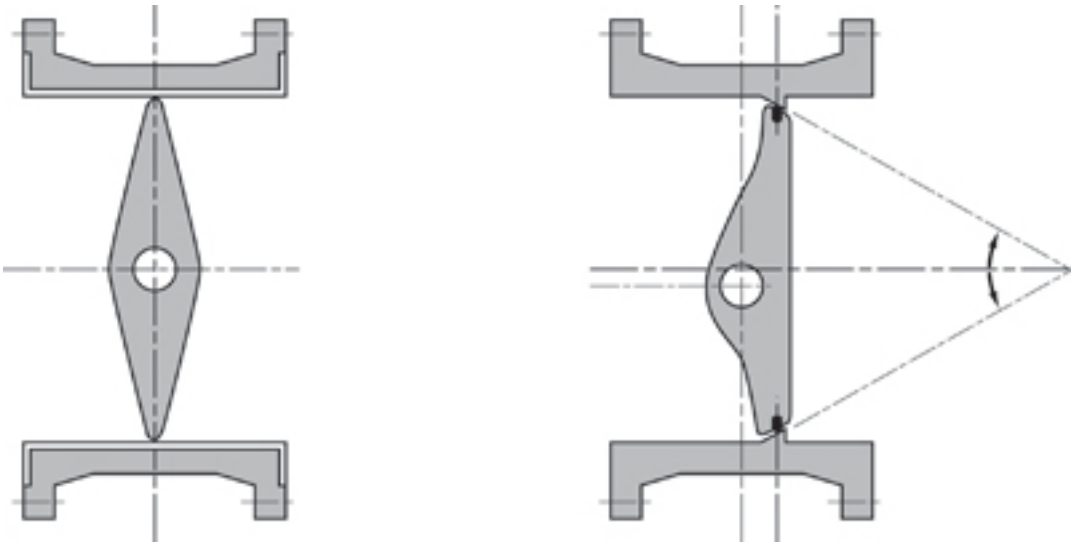

Fig 2: These butterfly shut-off valves are based on the double-eccentric functional principle, in which the disk in the open position is not in contact with the gasket.

The solution to both problems is the double eccentric functional principle (Figure 2) in combination with a conduit gasket in composite PTFE/FPM material, which is a new feature available in the Type 567/568 Butterfly Valves in PVDF. With the double eccentric functional principle, the contact areas between the medium and the elastomers have been strikingly reduced. This principle has been tried and tested in service since the market launch in 2005, and is what allows a PTFE conduit gasket to be used in the first place. Actuation torque up to 50 percent lower than with concentric valves has been achieved by the double eccentric design in conjunction with the pressure support of the conduit seal (Figure 3). In the open position, the disk is not in contact with the gasket.

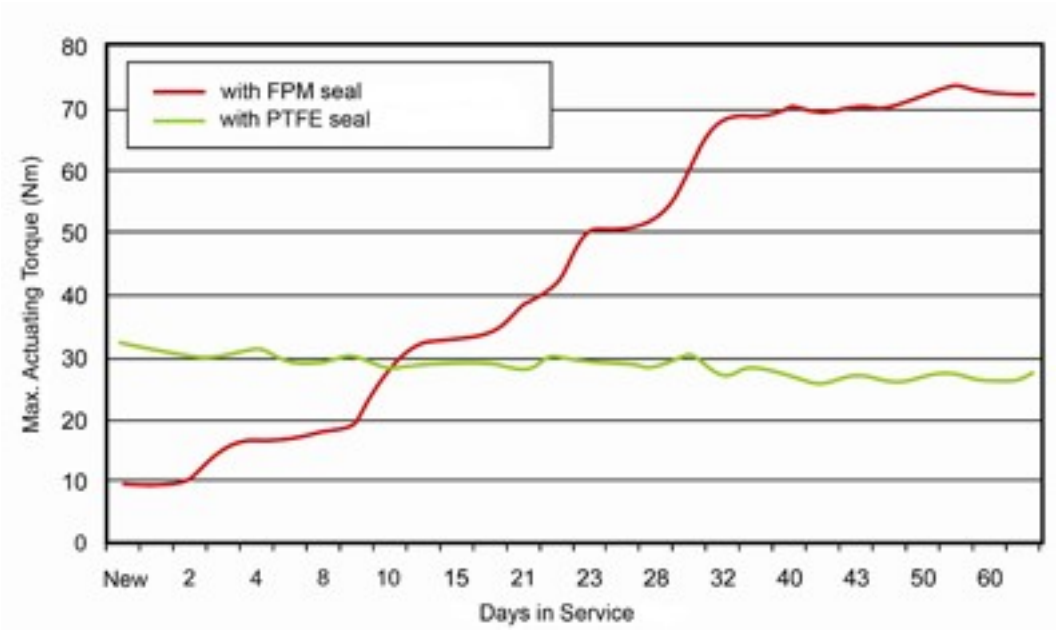

Fig. 3: Constant actuation torque with a PTFE conduit assures higher service-life and thus greater process reliability and safety.

With the PTFE sheath on the conduit gasket, the coefficient of friction is kept at a constant low level, even without lubrication. The FPM backing compensates for the cold flow and the poor retractive characteristics of PTFE. The swelling as a whole is reduced. For applications involving aggressive chemicals, this results in two important positive aspects: an even actuation torque which facilitates reliable opening and closing, and long life with a pronounced reduction in wear.

Various Gasket Types

The sealing system in a butterfly valve plays a central role in the conveying of aggressive media. For this reason, every sealing function is examined individually, and every gasket is optimally designed for its specific function. Essentially, three separate sealing elements are used in the Type 567/568 Butterfly Valves (Figure 4):Gasket in the valve opening: The PTFE profile conduit gasket ensures maximum process reliability and is matched to the double eccentric design of the 567/568 Valves. Sealing from the outside: A double, internal shaft gasket on both sides. Sealing from the connection fitting: A special profile gasket with broadened contact surface.

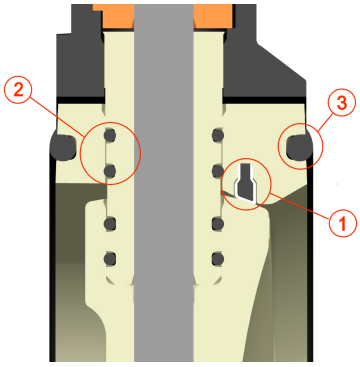

Figure 4: Innovative gasket concept consisting of 1.Flange gasket, 2. O-rings on the bearing shell and 3. Conduit gasket

1. Conduit Gasket

Tightness on both sides of the conduit is ensured by a sealing ring with a specially adapted sealing geometry. The gasket is stressed mechanically by the opening and closing of the valve, and chemically by the medium. The Type 567/568 Butterfly Valves take account the influencing factors and provide for optimum reduction of mechanical stresses. As it is mounted in the inner body, the sealing element is not exposed to the main flow, and wear is therefore reduced. The double eccentric design principle also has a favorable effect on the wear on the contact-free seat in the open position. During the last eight degrees of the closing motion, the disk is pressed into the seal seat. This leads to even pressure over the entire circumference. This increases the life of the seal seat and reduces the actuation torque.

Figure 5: These modular structure butterfly shut-off valves feature a combination of PVDF and an integrated PTFE conduit gasket which is unique on the market.

Most sealing methods in shut-off valves require a relatively high basic pressure between the sealing element and the disk. This is one of the main causes of intense wear on the sealing element and an associated shorter service life. For this reason, a pressure-assisted conduit gasket is used with the double eccentric design of the Type 567/568 Butterfly Valves (Figure 5). This means that the pressure applied is dependent on the medium pressure. Lower mechanical stresses, lower pressure, lower wear, lower actuation torque and longer service life are the obvious benefits of this design. All in all, that results in greater reliability.

2. O-rings on the Bearing Shell

Sealing from the outside in the shaft area is affected by O-rings. These are subject to dynamic rotary stresses when the shut-off valve is operated, and in part also to chemical stresses from the medium. The sealing system with O-rings has a number of advantages. It is also designed in such a way that the shaft does not come into contact with the medium.

The use of standardized O-rings facilitates simple replacement or adaptation to the requirements of the application, such as is the case with the butterfly valves of types 567/568. The O-ring material used here is a special FPM, optimised in terms of dynamic friction properties, chemical resistance and permeation rate. These O-rings thus guarantee consistent actuation torques and optimum external tightness, even with aggressive media.

There are two O-rings at each location, both to the outside and towards the disk. This double seal provides on the one hand for double safety, and on the other hand only one O-ring is in contact with the medium. In comparison with shut-off valves with collars, the O-ring sealing system is much less subject to wear, as the higher pressure exerted on collars as a result of the design often results in significant wear

in the shaft area.

3. Flange Gasket

A special O-ring with broadened contact surface is used as the seal between the flange and the connecting fitting. This profile seal has a number of decisive advantages over a flat gasket. The ease of assembly is worthy of special mention here, as it is not necessary to slide or fold the gasket or specially align it. With system-related temperature changes or pressure fluctuations, the profile seal is also superior to flat seals with regard to sealing to the outside. As the flange gasket is only subjected to static loads, chemical resistance of the elastomers is of great importance. With the use of standard O-ring dimensions for the profile seal in the Type 567/568 Butterfly Valves, the flange gaskets can be replaced at low cost by higher quality elastomer materials such as FFPM (perfluorate elastomers). This considerably increases the resistance to chemicals and thus opens up new potential applications for the valve.

Homogeneous Plastic Piping System with Pipes, Fittings & Shut-off Valves for Difficult Applications

With the new PVDF/PTFE Type 567/568 plastic butterfly valves, GF Piping Systems is now able to supply a homogeneous plastic piping system with pipes, fittings and shut-off valves for difficult applications. This is advantageous in many respects, such as simple and rapid installation at site, compatible jointing systems and the even expansion of the material in response to temperature changes, as the individual components are optimally matched. The double eccentric design allows the three seals to be separated and each to be optimally configured to suit the relevant sealing function. Longer service life and a lower maintenance requirement are the favourable effects on the cost side. The new PVDF/PTFE butterfly valves thoroughly fulfil the requirement for process and operational reliability in the most aggressive applications in industry.

For more information, please e-mail us.ps@georgfischer.com *[1] or visit* www.gfpiping.com *[2].*

Source URL (retrieved on *09/02/2014 - 7:44pm*):
http://www.chem.info/articles/2010/07/new-ptfe-gasket-butterfly-valve-enhances-process-reliability

Links:
[1] mailto:info@us.piping.georgefischer.com
[2] http://www.gfpiping.com/