Happy Ending: Metal Finishing Facility Finds Wastewater Treatment Solution

The loan of a 2-inch non-metallic pump changed everything. Despite being under a tremendous amount of abuse, the pump kept working without incident and dramatically increased productivity. Here's its story…

The third time's the charm, as the saying goes. This certainly was the case in the metal finishing industry at Central Metal Finishing (CMF) in North Andover, MA. Now on its third generation of pumps, CMF has finally found a solution to its wastewater treatment issues. Founded in 1977, the company employs 60 people and specializes in alloy processing, masking, multi-process applications, aluminum plating, and stainless steel and die cast materials.

In a metal finishing facility, wastewater management is critical. Often, seemingly small issues can shut down the entire cycle. Providing a variety of finishes and coatings, CMF rinse waters contain nickel, zinc, and other acidic metals. After these rinse waters are treated and their chemistries adjusted to a neutral ph level, CMF evaporators boil off the remaining water.

This part of the process can create problems for some facilities. The mag-drive pumps traditionally used to power evaporators are extremely susceptible to debris. Often small parts, bolts, masking, pieces of rubber, or other materials find their way off the floor and into the waste treatment cycle, ruining pumps and costing the facilities a lot of money. To combat this problem, many plants have switched to pneumatic pumps. Sean Park, facility technician at CMF, explains: "We use air pumps because they're easy to rebuild, handle the abuse better, and are able to pass the debris easier. Reliable pumps are absolutely essential to our productivity."

However, pneumatic pumps are not immune to damage from debris either. CMF encountered similar problems with its air-powered system. Debris from the holding tanks that was pumped out on its way to the filter press frequently clogged the pumps. Sputtering from debris, the pumps often required operators to rebuild them completely, even when resistance was minimal. "If there was even a little bit of back pressure forcing the pumps to work a little harder, the bottom would completely fall out," said Park. "It was just poor design."

Like many wastewater treatment processes, after the metals settle into concentrated slurry, pumps must be able to push all the solids and residual brine through the filter press in order to produce the solid cake. Perhaps the biggest problem CMF encountered occurred at the end of the filter press cycle. Already on its second pump model, CMF had difficulty keeping the liquid chambers clear and had solids backed up all the way from the filter press to the pump. Operators had to shut off the press, clean out the sludge, and restart, which often caused damage. "It seemed like every time an operator would fire up the filter press, it would bend the shafts on the pumps," said Park. "We constantly had money going out the door from restarting the pumps. It became a real issue for us."

Maintenance operators had to disassemble the pumps and clean them out. Sometimes more than one pump was down at a time, and Park had to wait for parts, which created a backlog of work. Operators had to come in on Saturdays and

Sundays to get the processes caught up.

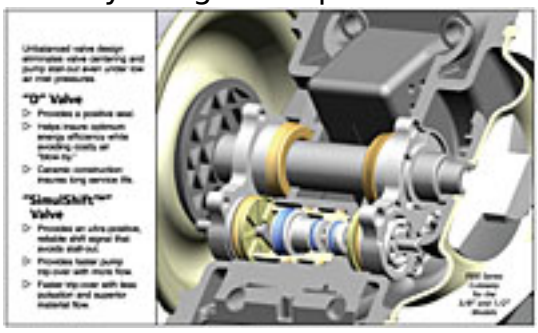

[1]

(Click image for larger version.)
The pump's unbalanced valve design eliminates valve centering and pump stall-out.

Park met with David Carson, director of industrial sales at Burt Process Equipment, and explained his situation. Carson offered to loan CMF a two-inch non-metallic Ingersoll Rand ARO EXPert Series pump, in place of his current pump, for 60 days. Tired of rotating failing pumps in and out, Park decided to try it. "We gave the ARO pump a tremendous amount of abuse and didn't have a single issue," he said. "It worked so well that our general manager didn't even want to purchase a new one. We kept the loaner!"The problems Park experienced are typical in wastewater treatment applications. Often, pumps do not produce a high enough flow rate to turn the slurry into a solid cake, creating problems on the line and in packaging. Typically, fluid caps are the culprits. Pumps with larger cavities in their fluid caps create better flow rates from lower air pressure. Additionally, many non-metallic pump manufacturers utilize a ribbed design on fluid caps. Originally intended to provide greater strength, the ribs actually function as stress points that weaken the caps, compromising structural integrity and decreasing pumping capacity.

Poor pump designs also create air "blow-by," another costly problem that decreases flow rate. Blow-by occurs when a positive seal is not achieved as the valve is shifting, creating lost air pressure and a decrease in energy efficiency.

[2]

(Click image for larger version.)

"The ARO pumps utilize a positive seal on the valve spool created by U-cups to ensure maximum efficiency," explained Carson. "The design is simple, rugged and almost completely avoids air blow-by."

Pumps also stall frequently in wastewater applications because of poor motor technology. Many pumps feature a "balanced" air valve design that allows the valve to center under low air inlet pressures, preventing a complete positive shift and stalling the pump. In filter press applications, where pressure is constantly increasing, a "straight-spool" design often spells pump trouble.

Freezing is another chronic problem in wastewater applications, causing the motor

to seize up and fail. Compressed air turns extremely cold as it returns to atmospheric pressure, allowing moisture with the air supply to freeze. These ice particles accumulate, clog the exhaust port, and stall the pump. To combat this problem, many facilities implement space heaters, hot water taps, and other thawing mechanisms.

"The Quick Dump feature on ARO pumps removes wet, cold air and sends it through the exhaust," explained Carson. "Operators don't need extra equipment to thaw the motor because it takes care of itself."

According to Carson and Park, the ARO EXPert Series pump has helped CMF dramatically increase productivity. It has been in use for two years now without repair.

Ingersoll Rand Productivity Solutions, 1467 Route 31 South, Annandale, NJ 08801, is a leader in air compressors, air systems components, pumps, material and fluid handling systems, and microturbines. More information is available at www.irtools.com/aro or by calling 419-633-1285.

Source URL (retrieved on *07/29/2014 - 4:44am*):
http://www.chem.info/articles/2007/06/happy-ending-metal-finishing-facility-finds-wastewater-treatment-solution?qt-most_popular=0

Links:
[1] http://www.chem.info/sites/chem.info/files/legacyimages/ProductImages/0706/ci76real01a_large.jpg
[2] http://www.chem.info/sites/chem.info/files/legacyimages/ProductImages/0706/ci76real01b_large.jpg